Current part is item (25) on diagram. Available at www.oshkoshequipment.com

(1) SMR Code	(2) Federal Stock Number	(3) Description Reference number & mfg. code — Usable on code	(4) Unit Of Meas.	(5) Qty Inc In Unit	(6) 15-day organizational Maintenance alw (a) 1-5	(b) 6-20	(c) 21-50	(d) 51-100	(7) Illustration (a) Figure No.	(b) Item No.
		1204—HYDRAULIC BRAKE SYSTEM—Continued								
P-O	2530-737-3718	CYLINDER ASSEMBLY: master w/supply tank assembly 7373718 (19207)	EA	1	*	*	*	*	39	20
P-O	2530-737-3782	EXTENSION: brake pedal pull back spring 7373782 (19207)	EA	1	*	*	*	*	39	21
P-O	2530-737-3783	PEDAL, BRAKE: w/bearing assembly 7373783 (19207)	EA	1	*	*	*	*	39	22
P-O	2520-454-3998	PAD, DRAFT: brake pedal 7351174 (19207)	EA	1	*	*	*	*	39	23
P-O	2530-522-4179	TUBE, ASSEMBLY, METAL: frame tee to front line, rear 1272531 (12204)	EA	1	*	*	*	*	39	24
P-O	2530-737-5400	CYLINDER, ASSEMBLY, HYDRAULIC BRAKE: left 7375400 (19207)	EA	2	*	*	*	*	39	25
P-O	2530-737-5401	CYLINDER, ASSEMBLY, HYDRAULIC BRAKE: right 7375401 (19207)	EA	2	*	*	*	*	39	25
P-O	5305-225-8496	SCREW, CAP, HEXAGON HEAD: wheel cylinder MS90725-31 (96906)	EA	8	*	*	*	*	39	26
P-O	5310-407-9566	WASHER, LOCK: wheel cylinder MS35338-45 (96906)	EA	8	*	*	*	*	39	27
M-O		TUBE, ASSEMBLY, METAL: frame tee to front line, front 34 - ¼ inches long 1268699 (12204) Fabricate from:		1					39	28
P-O	4710-277-5525	TUBE, COPPER: seamless BB3338 (50513)	FT	V	*	*	*	*	39	29
P-O	4730-014-2432	INVERTED, NUT, TUBE COUPLING: 142432 (19207)	EA	4	*	*	*	*	39	30
P-O	2530-522-4141	TUBE, ASSEMBLY, METAL: front axle left brake 1268697 (12204)	EA	2	*	*	*	*	39	31

Current part is item (25) on diagram. Available at www.oshkoshequipment.com

Current part is item (25) on diagram. Available at www.oshkoshequipment.com

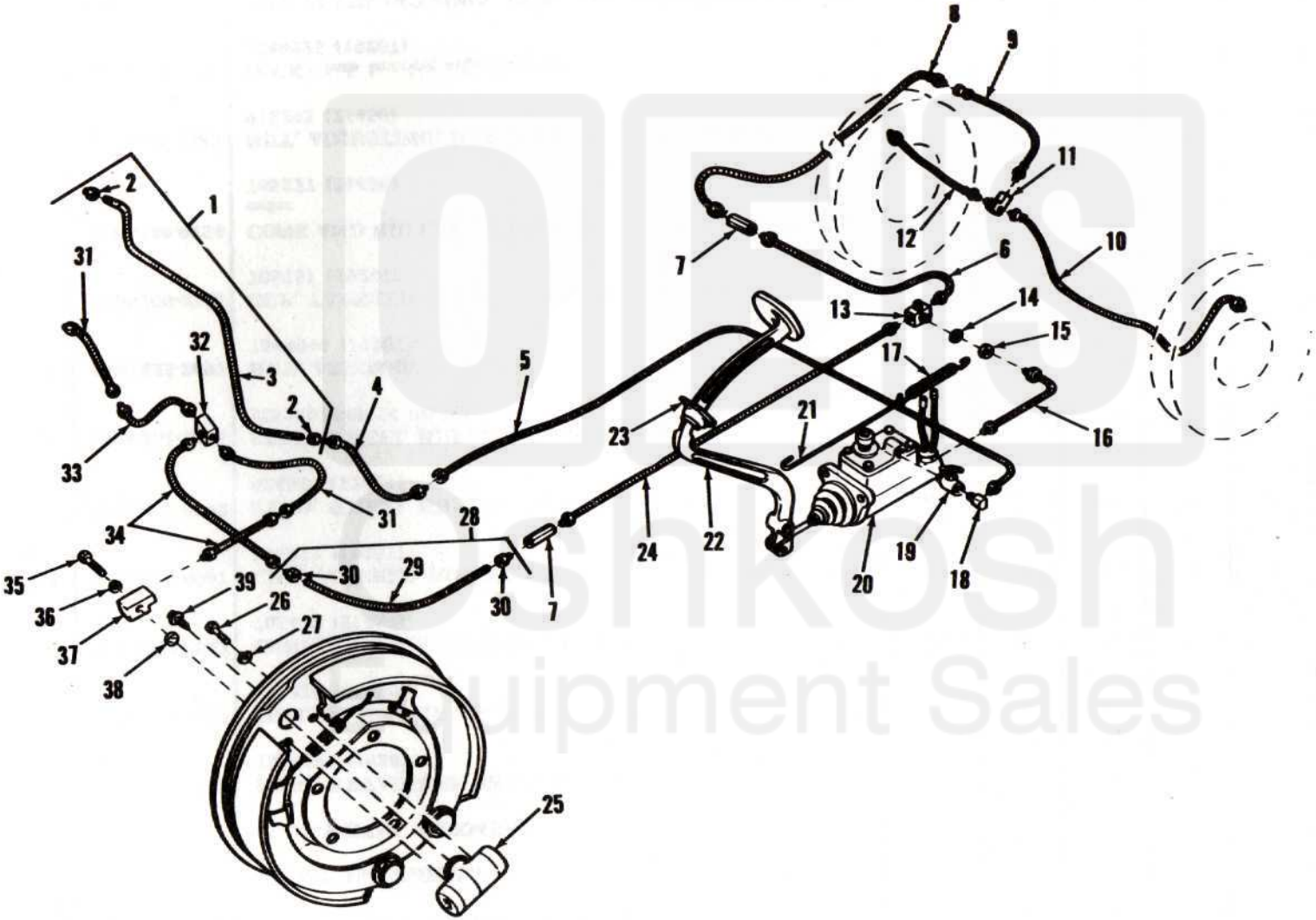

AT 40636

Figure 70. Hydraulic brake system

Current part is item (25) on diagram. Available at www.oshkoshequipment.com